REVISIONS			
REV	DESCRIPTION	Date	APPROVED

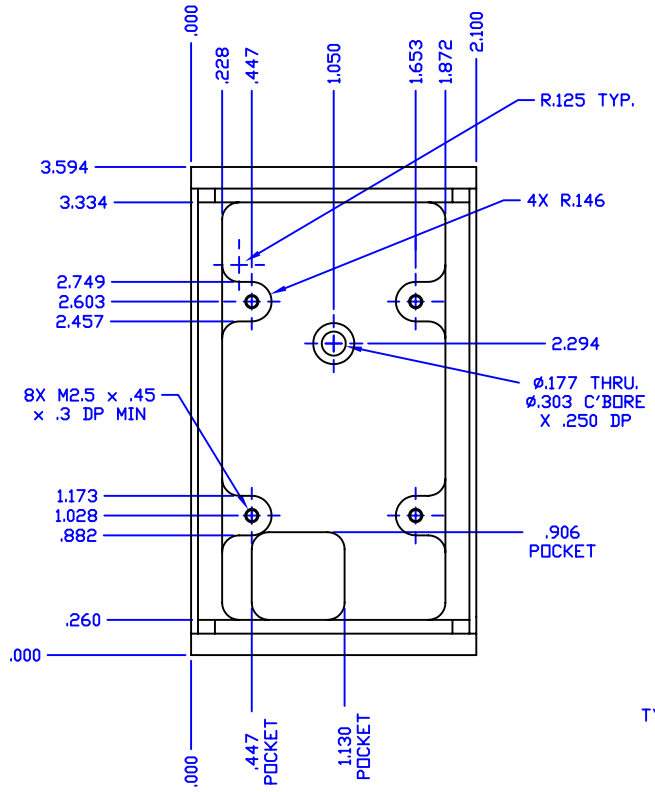

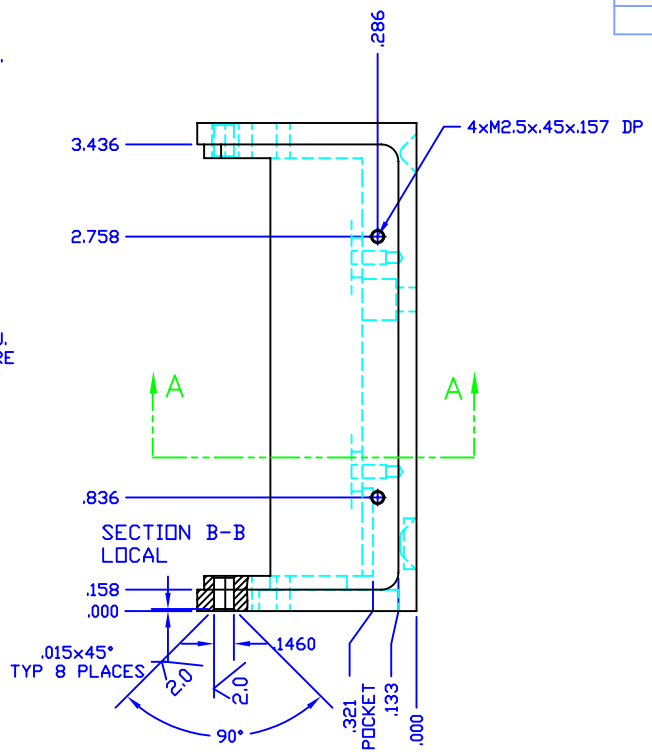

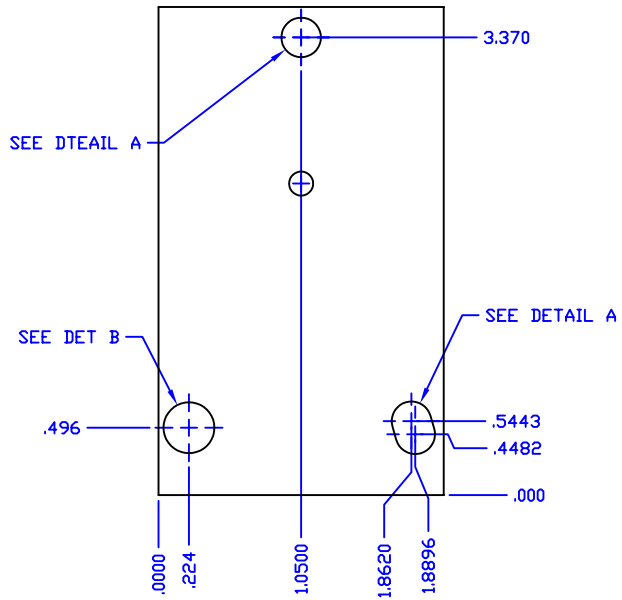

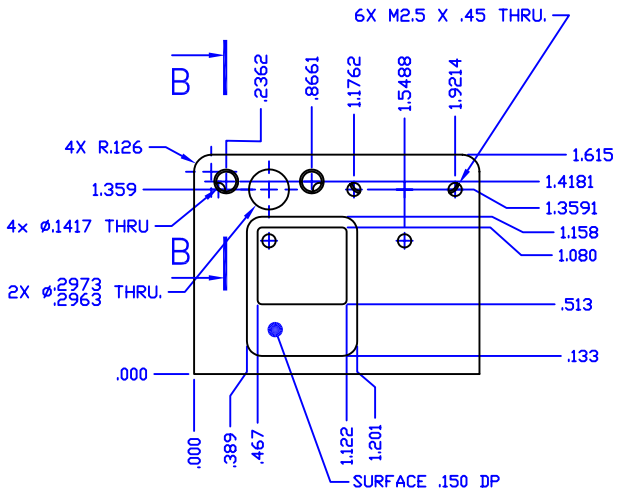

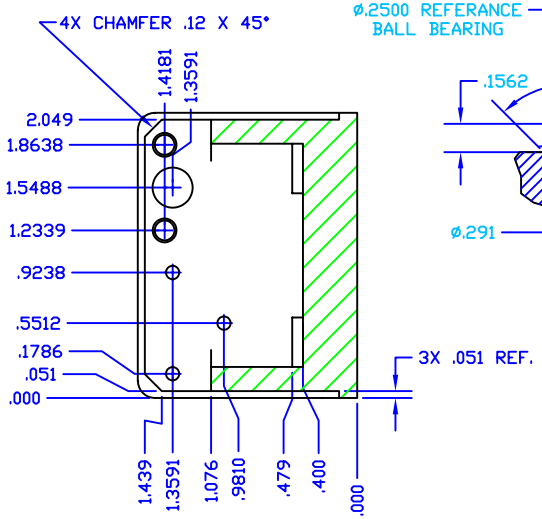

SECTION A-A

CONE AND SLOT
DETAIL "A"
SCALE = 2X

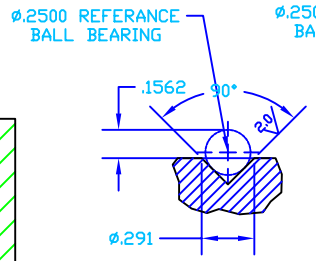

PAD DETAIL "B"
SCALE = 2X

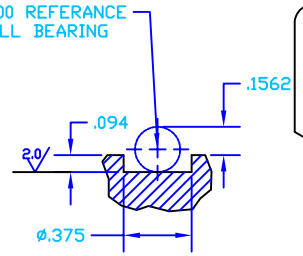

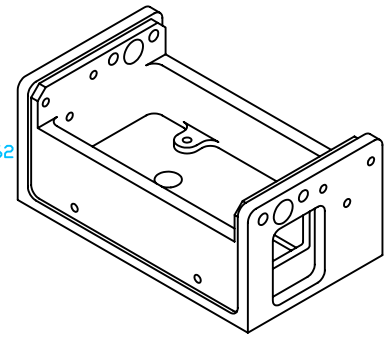

NOTES:
1. DO NOT SAND BLAST.
2. ALL DIMENSIONS ARE AFTER PLATING.
3. MASK ALL THREADS BEFORE PLATING.

MATERIAL	TREATMENT
AL 6061 OR EQUIV.	

TOLERANCES	SIGNED	
UNLESS SPECIFIED: DIMENSIONS ARE IN INCHES .XX = ± .01 .XXX = ± .005 .XXXX = ± .0010 ANG. = ± 0°30' REMOVE ALL BURRS AND SHARP EDGES in [mm]	DATE 04.22.08 DRAWN KEN WYNN ENGINEER AD CHECKED	Atlas Brandeis University Waltham MA 02254
		Title BCAM-2 BASE MIRRORED
		DWG NO. 200-07-01C REV. C
		Scale NONE Sheet 1 of 1